Inter® Water

Backflow
It is recommended to install the Water Leveler with a control to prevent reverse flow such as an anti-siphon or a double-check valve.

Overflow
An opening for overflow protection is built into the Water Leveler. To install the unit without the overflow protection, seal the opening with the 1/2-inch plug included in the packaging.

NOTE: BODY, PLUG, AND ADAPTERS ARE ABS PLASTIC - USE ABS TO PVC GLUE WHEN PLUMBING TO PIPE.
CHECK FOR LEAKS BEFORE PROCEEDING WITH THE INSTALLATION.
Follow the diagram to the right for proper installation.

Take particular care when installing the float lever. The entire assembly should be installed by hand, and each adjustment should not exceed ¼ of a turn.

Be sure unit is installed flush with the deck. To adjust the water level loosen the wing nut, move the float up or down, and tighten the nut.

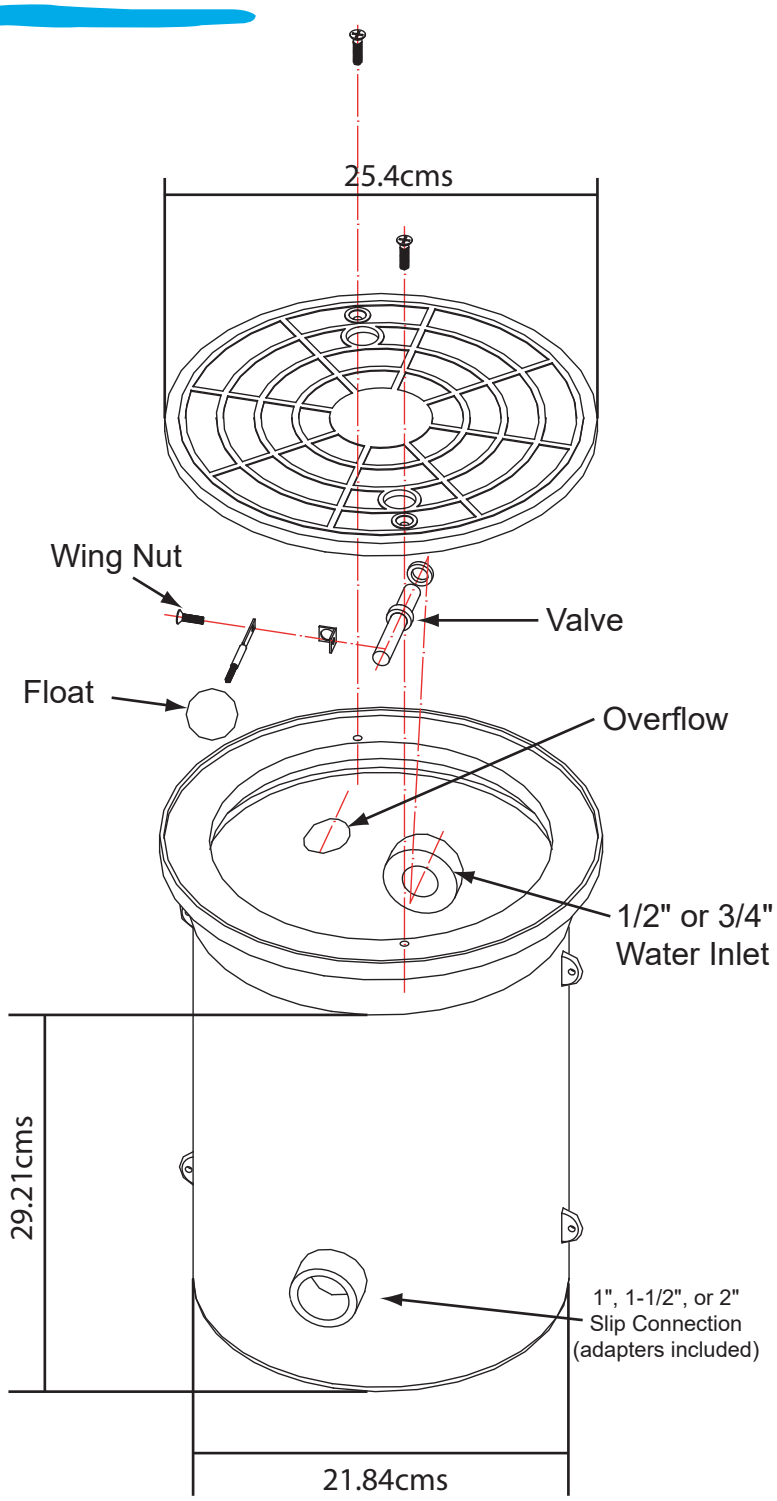

⚠ WARNING

This product is must be installed and serviced by a pool and spa professional. These instructions must be followed exactly to ensure proper function of the parts.

Inter® Water

This Water Leveler has built in protection from overflow. If this feature is not needed glue the 1/2" plug into the overflow port.

Installation for Pools

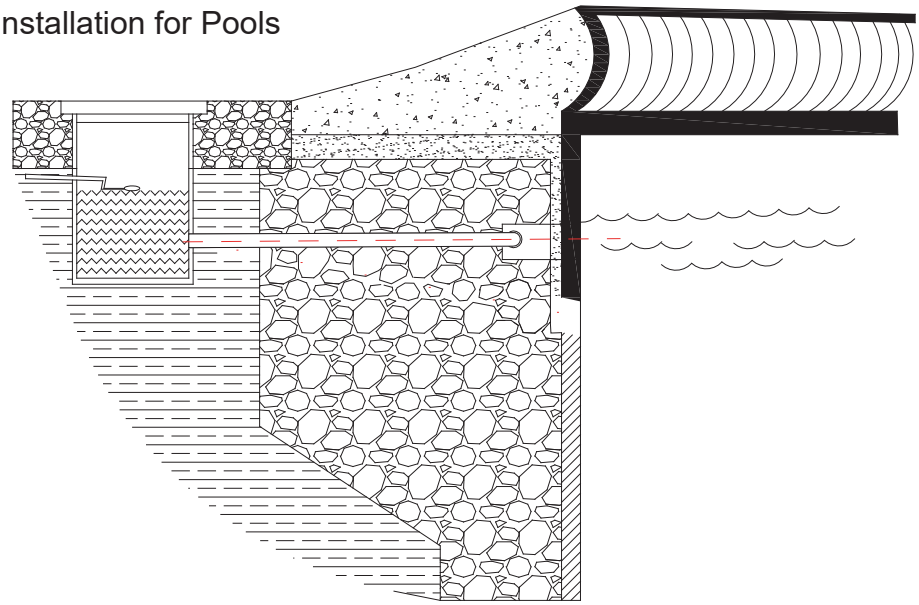

Installation for Spas

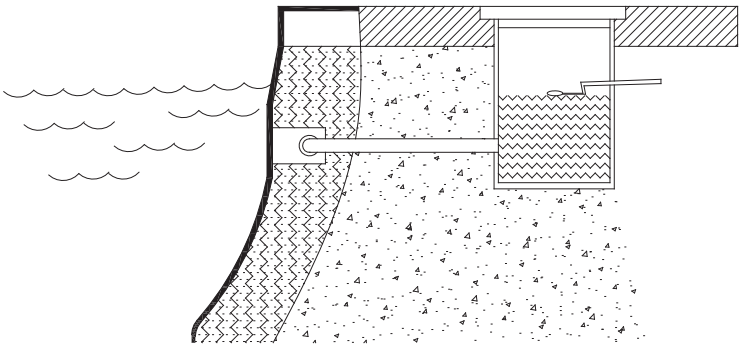

⚠ WARNING

This product is must be installed and serviced by a pool and spa professional. These instructions must be followed exactly to ensure proper function of the parts.