Jandy®

Installation and Operation Manual



Jandy Laminar Jet

⚠ WARNING

FOR YOUR SAFETY - This product must be installed and serviced by a professional pool/spa service technician. The procedures in this manual must be followed exactly. Failure to follow warning notices and instructions may result in property damage, serious injury, or death.

This manual contains important information about the installation, operation and safe use of this product. This information should be given to the owner/operator of this equipment.

H0317700B

Table of Contents

Section 1. Safety Information 4

Section 2. General Installation Requirements 5

2.1 Water Source 5
2.2 Pump 5
2.3 Plumbing 5
2.4 LED Light Module 5
2.5 Conduit/Fiber Optics Module 5
2.6 Critical Placement Dimensions 5

Section 3. Installing the Deck Canister 7

3.1 In-Deck Installation 7
3.2 Out-of-Deck/Planter Box Installation 8
3.3 Pressure Test Water Lines 8
3.4 Flush Water Lines 8

Section 4. Laminar Jet with LED Light Installation (Use with Model JLLED) 9

4.1 Preparing the Laminar Jet with LED Light for Installation 9
4.2 Installing the Laminar Jet with LED Light 9
4.3 Wiring Options for Controlling Laminar Jet with LED Lights 9
4.3.1 Wiring to an AquaLink® RS Control System 9
4.3.2 Wiring to a Time Clock 10
4.3.3 Wiring to a Switch 10
4.4 Twelve (12) Volt Transformer Installation . 10

Section 5. Laminar Jet with Fiber Optic Module Installation (Use with Model JLFBR) 11

5.1 Items Required 11
5.2 Installation 11

Section 6. Starting the System 11

6.1 Install Jet Assembly 11
6.2 Set up Jet 11

Section 7. Operating the Laminar Jet with LED Light 12

7.1 To Operate the Light and Change Colors 12
7.2 To Reset to the Beginning of the Color Sequence 13

Section 8. Light Intensity Set Up 13

8.1 Light Intensity Adjustment Set 13

Section 9. General Maintenance and Troubleshooting 14

9.1 Clogged Nozzle 14
9.2 Winterization 14

Section 10. Parts List and Exploded View ... 14

10.1 Parts List 14
10.2 Exploded View 15

Section 1. Safety Information

IMPORTANT SAFETY INSTRUCTIONS PERTAINING TO A RISK OF FIRE, ELECTRIC SHOCK, OR INJURY TO PERSONS

READ AND FOLLOW ALL INSTRUCTIONS

When installing and using this electrical equipment, basic safety precautions should always be followed, including the following:

⚠ WARNING

RISK OF ELECTRICAL SHOCK OR ELECTROCUTION. This Laminar Jet with LED light must be installed by a licensed or certified electrician in accordance with the National Electrical Code and applicable local codes and ordinances. Improper installation will create an electrical hazard, which could result in death or serious injury to pool or spa users, installers, or others due to electrical shock, and may also cause damage to property. Read and follow the specific instructions below.

⚠ WARNING

Before installing this Laminar Jet with LED light, read and follow all warning notices and instructions accompanying this product. Failure to follow safety warnings and instructions can result in severe injury, death, or property damage. Call (800) 822-7933 for additional free copies of these instructions.



ATTENTION INSTALLER: This manual contains important information about the installation, operation and safe use of this product. This information should be given to the owner/operator of this equipment.

SAVE THESE INSTRUCTIONS

Section 2. General Installation Requirements

This document gives instructions for installing the Jandy Laminar Jet with LED Lights. Read through the instructions completely before starting the procedure. The laminar jet is designed to provide a clear, adjustable stream of water that arcs high up and out into the pool.

The laminar jet comes with a built-in LED light module or a fiber optic module that accepts lighted fiber optics. These light sources light the arc of water creating a dazzling nighttime effect. This unique water feature is easily installed and multiple jets can be combined to create spectacular water entertainment.

To properly install this product please review the following installation and maintenance instructions.

2.1 Water Source

The laminar jet water supply line must be filtered by a cartridge filter (do not use a sand filter). If you are using a dedicated filter - it must be a minimum of 20 sq-ft. For multiple jet installations, use a minimum of 100 sq-ft, such as the Jandy CS100 filter.

2.2 Pump

The required minimum pump flow for each laminar jet is shown in the table below:

Laminar Jet Water Volume and Pressure Chart			
Gallons (U.S. gpm)	7.5	8.0	8.5
Inlet Pressure (psi)	9.5	10.3	11
Height of Jet (ft)	5	6	7

2.3 Plumbing

Each laminar jet requires a 1½ to 2 inches PVC main feed line with 1 inch PVC entering the deck canister. A check valve is also required and should be placed as far from the deck canister as possible to minimize water turbulence. Refer to Figures 1 and 2, and Table 1.

2.4 LED Light Module

The 12V LED light module offers vibrant lighting in nine (9) brilliant colors and five (5) festive color shows that can be controlled manually, by the AquaLink® RS Control System (Rev O or newer) or by the Jandy PDA Control System (Rev 4.0 or newer). The light module can provide up to 50,000 hours of light and can be synchronized with Jandy's Pool and Spa LED lights and operates on less than 25 watts of power.

2.5 Conduit/Fiber Optics Module

If installing fiber optics, each laminar jet will require 100 to 150 strand fiber optic cable. One hundred-fifty strand cable is recommended due to the enhanced lighting effects.

2.6 Critical Placement Dimensions

The laminar jet can project a maximum of 7 feet up and 8 feet out into the water. Therefore, ensure the installation is no more than 6 feet from the *inside* edge of the pool.

NOTE To avoid water spray on the deck in high wind areas, place the laminar jet closer to the edge of the pool.

NOTE The deck canister lid can only rotate approximately 90 degrees to the left or the right. Therefore, make sure that the deck canister is positioned towards the desired target location (see *Section 3*) ***prior*** to completing the installation.

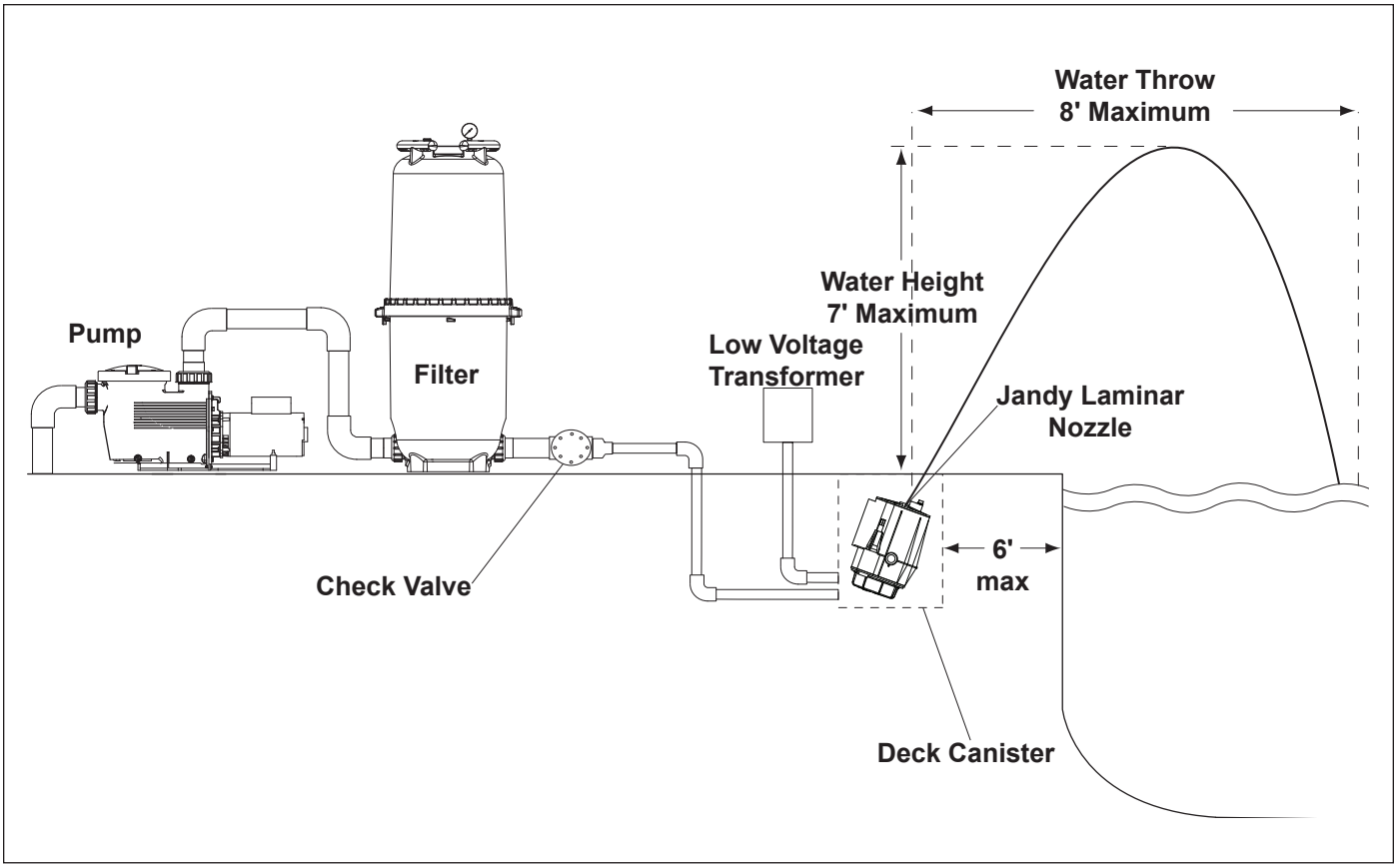

Figure 1. Basic Plumbing Diagram for Laminar Jet with Deck Canister

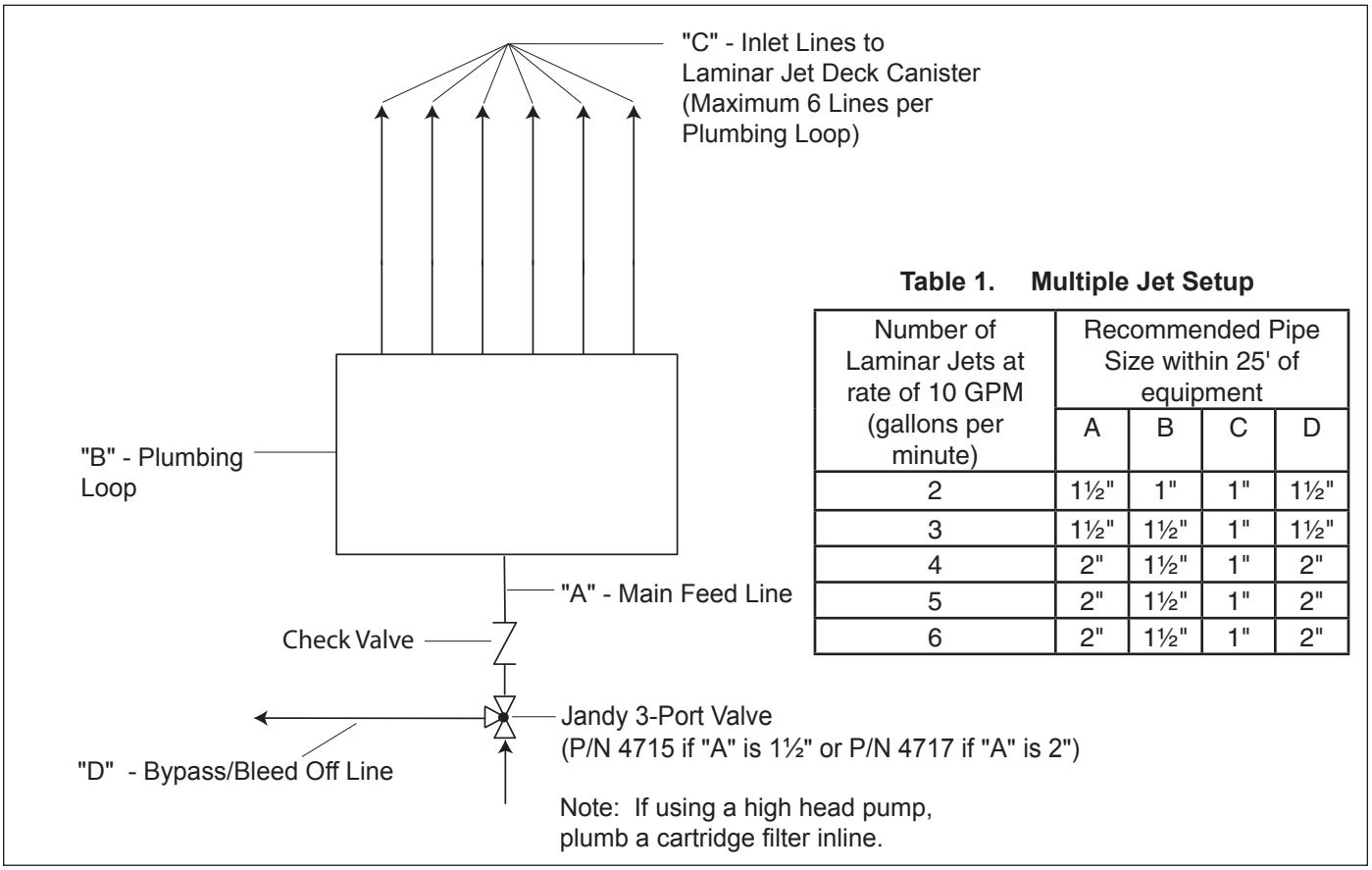

Table 1. Multiple Jet Setup

Number of Laminar Jets at rate of 10 GPM (gallons per minute)	Recommended Pipe Size within 25' of equipment			
	A	B	C	D
2	1½"	1"	1"	1½"
3	1½"	1½"	1"	1½"
4	2"	1½"	1"	2"
5	2"	1½"	1"	2"
6	2"	1½"	1"	2"

Figure 2. Plan View of Plumbing Loop for Multiple Laminar Jets

Section 3. Installing the Deck Canister

NOTE Prior to installing the Jandy laminar jet deck canister, locate the jet opening (slot) in the deck canister cover. Make sure that this opening is pointing towards the desired target location in the pool. Use the water stand pipe as a reference (see Figure 3). Determining the orientation of the deck canister will also establish where to place the plumbing and fiber optic conduit.

NOTE The deck canister lid can only rotate approximately 90 degrees to the left or the right. Therefore, make sure that the deck canister is positioned towards the desired target location ***prior*** to completing the installation.

3.1 In-Deck Installation

1. Dig the hole for the deck canister approximately 24 inches deep and 18 inches in diameter. This will ensure enough room for positioning the canister and laying out the plumbing. This depth also allows for the addition of a layer of pea gravel (1/8 to 1/4 size) for stability and additional drainage. Refer to Figure 4 for deck canister dimensions.
2. Set the deck canister in the hole. The top edge of the lid/collar should be flush with the finished deck, after the deck material is poured.

NOTE To ensure that the canister stays upright while installing ***and*** leveling the unit, place a 6 inch piece of 1 inch PVC pipe in the construction support stake-up socket located on the bottom of the canister (see Figure 5).

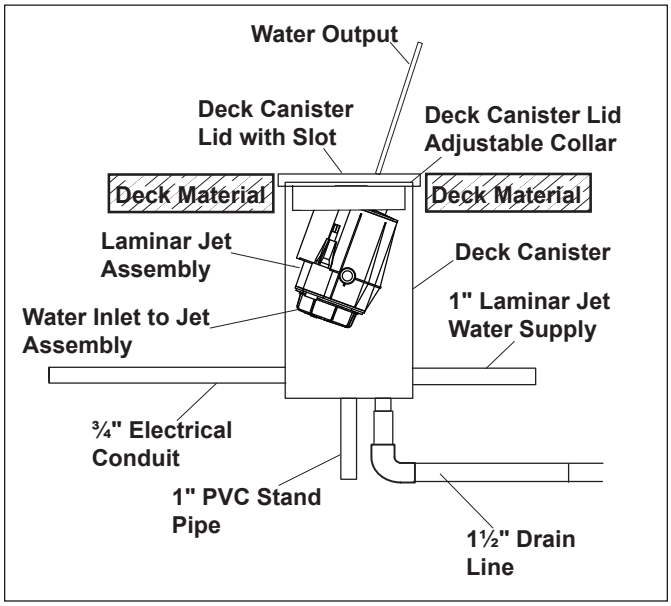

Figure 3. Laminar Jet Deck Canister Schematic

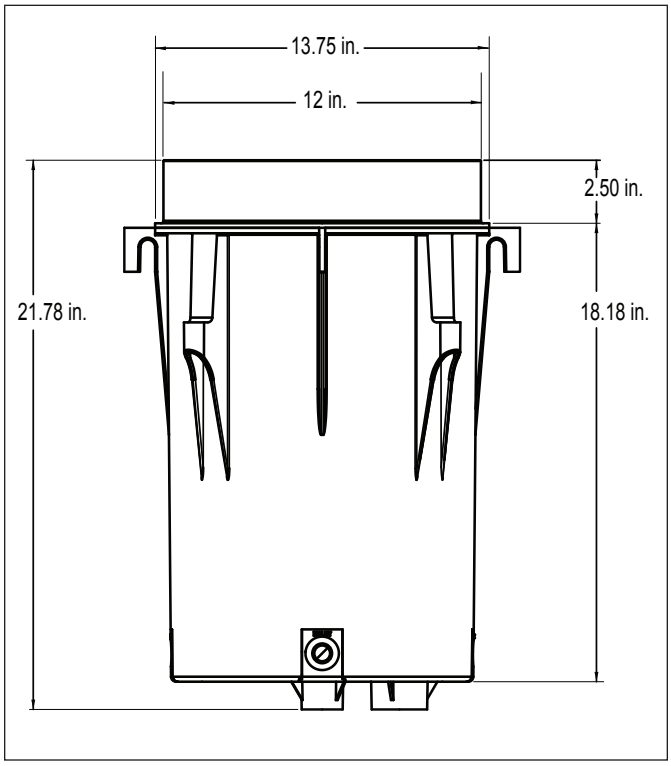

Figure 4. Deck Canister Dimensions

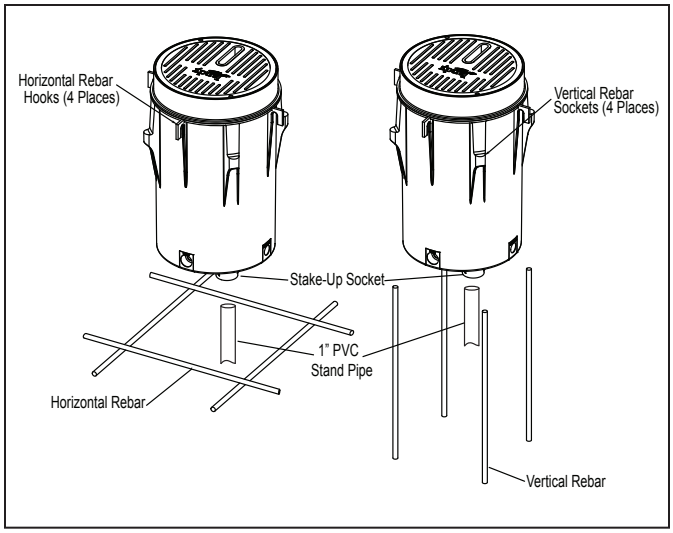

Figure 5. Deck Canister Rebar Hooks and Sockets

3. Level the deck canister. To hold the canister in place while the deck is poured, secure the canister by tying it with tie wire to the steel framework of the deck. To mount level, horizontal rebar hooks and vertical rebar sockets are provided around the outside of the canister. See Figure 5.
4. Plumb the incoming filtered water supply to the 1 inch hub located on the side of the deck canister marked “Inlet” (see Figure 6). The filtered water supply must include a check valve (see Figures 1 and 2).
5. Plumb the conduit for the fiber LED cable to the 3/4 inch socket located either side of the deck

canister marked “Electrical” (see Figure 6). Refer to Section 5 for fiber optic installation.

NOTE Use one (1) of the two (2) electrical inlets, located on either side of the deck canister, which are provided for installation ease.

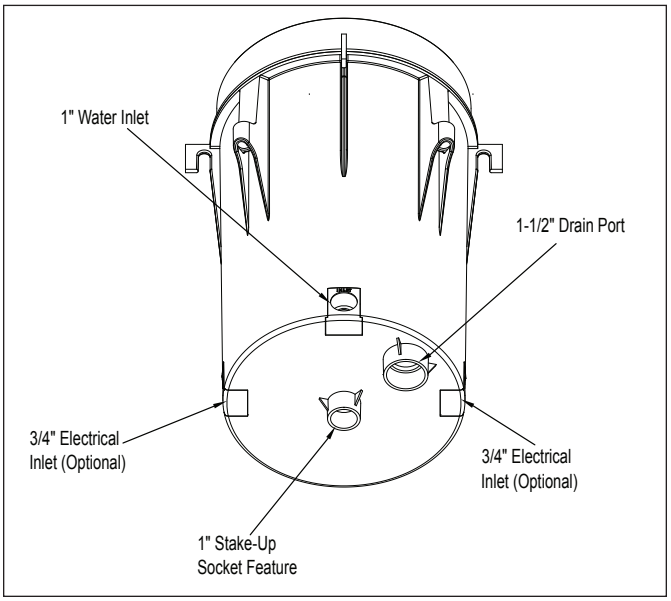

Figure 6. Deck Canister - Bottom View

6. Plumb in the 1½ inch drain line. Adequate drainage must be provided for the deck canister.

NOTE Proper drainage for the deck canister is critical to avoid damage to the laminar jet assembly.

7. Verify the deck canister is level.

8. Place the adjustable deck lid collar back on the canister. This collar allows the installer to make fine adjustments when leveling the canister to be flush with the deck's finished surface. Set the collar at the finished deck level and pour the deck.

3.2 Out-of-Deck/Planter Box Installation

CAUTION
Do not install the Jandy laminar jet deck canister in an area prone to run-off or flooding or on a flammable surface.

NOTE The deck canister lid can only rotate approximately 90 degrees to the left or the right. Therefore, make sure that the deck canister is positioned towards the desired target location ***prior*** to completing the installation.

1. Dig the hole for the deck canister approximately 24 inches deep and 18 inches in diameter. This will ensure enough room for positioning the canister and laying out the plumbing. The dimensions allow for the addition of a layer of pea gravel (1/8 to 1/4 size) for drainage, as well as room to pour concrete around the outside of the canister for stability.

NOTE Proper drainage for the deck canister is critical to avoid damage to the laminar jet assembly.

2. Lift up the lid and jet assembly and adjustable deck lid collar from the deck canister.

NOTE To ensure that the canister stays upright while installing and leveling the unit, place a 6 inch length of 1 inch PVC pipe in the stake-up socket feature located on the bottom of the canister (see Figure 5).

3. Set the deck canister in the hole. The canister should be approximately 1½-2 inches ***above*** the finished grade in the planter.

NOTE Unlike the in-deck installation, the deck canister cover cannot be flush with the finished grade. It must sit slightly above the surface to prevent water and debris from seeping into the canister.

4. Level the deck canister. To hold the canister in place, position a 6 inch piece of 1 inch PVC pipe in the construction support socket located on the bottom of the canister (see Figure 5).

5. Plumb the incoming, filtered water supply to the 1 inch hub located on the bottom of the deck canister marked “Inlet” (see Figure 6). The filtered water supply must include a check valve (see Figures 1 and 2).

6. Plumb the conduit for the fiber/LED cable to the 1 inch hub located on the bottom of the deck canister marked “Electrical”. Refer to Section 5 for fiber optic installation.

7. Plumb in the 1½ inch drain line located on the bottom of the deck canister. Adequate drainage must be provided for the canister.

8. Fill in the hole surrounding the deck canister with concrete or suitable backfill material for stability in the ground.

9. Place the adjustable deck lid collar back on the canister.

3.3 Pressure Test Water Lines

The unit is shipped ready for the pressure test with a cap on the flexible hose that is attached to the canister.

NOTE This cap can be used to winterize the system or service the unit, if needed.

3.4 Flush Water Lines

It is important that prior to reinstalling the laminar jet and deck canister lid, the installer must turn on the water source and ***flush the lines of any debris***.

NOTE The finger screen is installed in the fitting under the cap. Remove the finger screen when flushing the line and reinstall the screen when reinstalling the cap or the jet assembly as shown in Section 6.1.

Section 4. Laminar Jet with LED Light Installation (Use with Model JLLED)

⚠ WARNING

Risk of Electrical Shock or Electrocution. This laminar jet with LED light must be installed by a licensed or certified electrician or a qualified pool serviceman in accordance with the National Electrical Code and all applicable local codes and ordinances. Improper installation will create an electrical hazard, which could result in death or serious injury to pool or spa users, installers or others due to electrical shock, and may also cause damage to property.

Always disconnect the power to the laminar jet with LED light at the circuit breaker before installing or servicing the light. Failure to do so could result in death or serious injury to serviceman, pool or spa users or others due to electrical shock.

4.1 Preparing the Laminar Jet with LED Light for Installation

NOTE The electrician must complete preparatory steps before the laminar jet with LED light is installed. See Figure 1.

Ensure that the pool meets the requirements of the current National Electrical Code and all local codes and ordinances. A licensed or certified electrician must install the electrical system to meet or exceed those requirements before the laminar jet with LED light is installed. Some of the requirements of the National Electrical Code, which the pool electrical systems must meet, are as follows:

1. The low voltage transformer must be located at least 8 inches above water level, at least 4 inches above ground level, and at least 4 feet from the edge of the pool.
2. All metal items within 5 feet of the pool must be properly electrically bonded to a reliable point of grounding.

4.2 Installing the Laminar Jet with LED Light

NOTE Perform these steps *only* after the electrical system requirements are met.

1. Feed cord through conduit to low voltage transformer, leaving at least 4 feet of cord at the light fixture to coil into the deck canister. See Figure 1. The 4 feet of cord allows the light to be easily serviced.
2. Cut the cord at the low voltage transformer, leaving at least 6 inches of cord to make connections.
3. Strip 6 inches of the outer cord jacket to expose the three (3) insulated wires. *Be careful not to damage the insulation on the three (3) inner wires*.
4. Install strain relief over cord jacket and connect all three (3) wires to the corresponding circuit wires in the low voltage transformer. Install the low voltage transformer cover.
5. Turn on main switch or circuit breaker, and the switch, which operates the laminar jet with LED light, to check for proper operation. Refer to *Section 7, Operating Instructions*.

4.3 Wiring Options for Controlling Laminar Jet with LED Lights

NOTE The **laminar jet with LED lights** will not operate properly with light dimmers. *Do not wire the laminar jet with LED lights to any dimming circuitry*.

To the extent allowed by code and capacity of the electrical equipment, multiple laminar jets with LED lights may be controlled with a single switch so their colors will *always* be synchronized.

Separate switches may be used to control the on/off and color functions of each laminar jet with LED light. It is recommended that these switches be located next to each other to facilitate simple color synchronization when desired. All switches *must be operated at the same time to assure color synchronization.* Otherwise, the lights will work independently of each other.

4.3.1 Wiring to an AquaLink® RS Control System

The laminar jet with LED light can be wired into the Jandy AquaLink RS control system to provide simplified operation of the lights, as well as a means to synchronize the color change function. Connect the laminar jet with LED lights to one of the auxiliary relays in the Power Center.

NOTE It is recommended to connect one (1) laminar jet with LED light per relay so each light can be controlled separately. However, up to four (4) laminar jets with LED lights can be connected on a single relay. If there are more than four (4) lights installed on one (1) AquaLink RS system, ensure there is more than one (1) auxiliary relay available in the Power Center.

Refer to Figure 7 to connect the laminar jet with LED lights to the power center.

NOTE The laminar jet with LED light operates only on 12 volts AC. A suitable 120-volt/12-volt stepdown AC transformer MUST be used. Refer to *Section 4.4* of this manual for further important details.

4.3.2 Wiring to a Time Clock

The laminar jet with LED lights can be wired into a basic time clock to automatically turn on the laminar jet with LED lights at a predesignated time. Refer to Figure 8 to connect the laminar jet with LED lights into the time clock.

4.3.3 Wiring to a Switch

The laminar jet with LED lights can be wired into a switch to manually turn on/off the lights. Refer to Figure 9 to connect the laminar jet with LED lights into the switch.

4.4 Twelve (12) Volt Transformer Installation

The laminar jet with LED lights requires the use of a 120/12VAC-100 watt low voltage lighting transformer.

NOTE For optimum performance Zodiac Pool Systems, Inc. recommends using one transformer per 12-volt laminar jet. However, it is possible to power up to 4 laminar jets with one 200 watt transformer.

To ensure maximum safety, the transformer used to power the laminar jet with LED lights must be one that is listed by a Nationally Recognized Testing Laboratory (NRTL) for the application.

NOTE If the pool already has a low voltage transformer powering the pool and/or spa lights, do not use the same transformer to power the laminar jet with LED lights. This is to ensure that the laminar jet's LED lights are only turned on when the laminar jet pump is running.

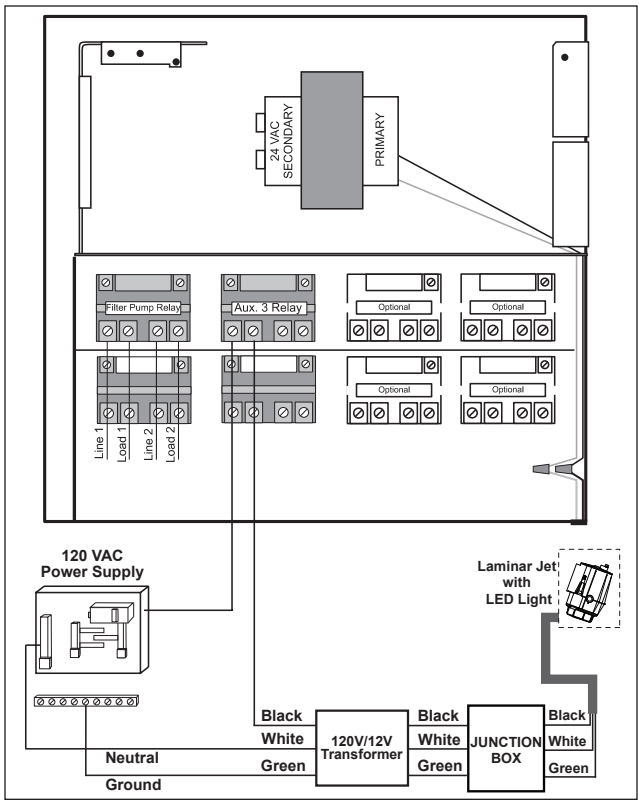

Figure 7. 12-Volt Laminar Jet with LED Light Wiring Diagram

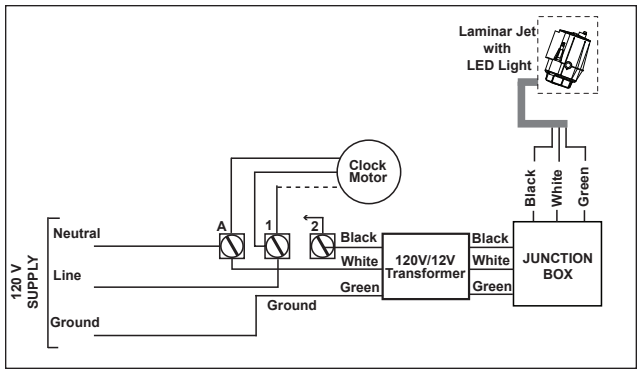

Figure 8. Wiring the Laminar Jet with LED Light to a Time Clock

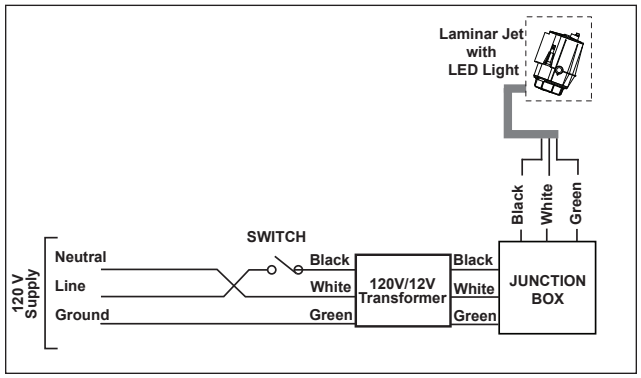

Figure 9. Wiring the Laminar Jet with LED Light to a Switch

Section 5. Laminar Jet with Fiber Optic Module Installation (Use with Model JLFBR)

5.1 Items Required

The tools and supplies necessary for installation of the fiber optic module:

Tools	Utility knife or hot knife; Heat gun or propane torch.
Cable	Each jet requires 100 to 150 strands of fiber optic cable. Do not use more than 40 feet of cable per nozzle as light output will be diminished.
Illuminator	Use illuminator with sufficient capacity of lighting effect intended.
Additional Materials	Electrical tape; Silicon (RTV)

5.2 Installation

1. Remove 6 inches of the cable jacket.
2. Using black electrical tape, tightly tape over the exposed fiber leaving approximately ½ inch exposed fiber at the end of the cable. The tape prevents the individual fibers from separating.
3. With a hot knife, cut the fiber optic cable so that the cable end is a flat surface. For best results, heat knife to cherry red.

NOTE Do not cut the fiber ends too close to the taped edge. Leave a ¼ inch distance between the cable end and the end of the taped edge. This will prevent adhesive on the tape from melting and getting on the ends of the fiber optic strands.

4. Slide the completed fiber optic cable through the Heyco®* waterproof fitting and up the tube (located at the bottom of the jet) until the cable bottoms out on the lens inside unit. Secure the fiber by tightening the waterproof fitting.

*Heyco is a registered trademark of Heyco Products, Inc.

NOTE Allow at least four (4) feet of extra fiber optic cable in the deck canister to allow the laminar jet to be easily removed.

5. Fill the electrical conduit between the opening and the fiber optic cable with RTV silicon to prevent water from entering the conduit. Let dry. The unit is now ready for operation.
6. Install illuminator and attach fiber optic cable according to instructions supplied with the illuminator.

Section 6. Starting the System

6.1 Install Jet Assembly

1. Disconnect the pressure cap that is installed on the flexible PVC hose.

NOTE The system should be pressure tested before starting the system.

2. Flush water lines to clear debris. Lines must be clear of debris before attaching the laminar jet assembly.

NOTE The finger screen is installed in the fitting under the cap. Remove the finger screen when flushing the line and reinstall the screen before installing the laminar jet assembly.

3. Connect the nut on the flexible hose of the laminar jet assembly and the threaded union of the flexible hose attached to the deck jet canister.

6.2 Set up Jet

1. Place the jet assembly into the canister and align the mounting brackets to the collar.
2. Ensure the flow adjustment valve is open by turning it counter-clockwise until it stops with a screw driver or a 1/2” socket wrench. Refer to Figure 10.
3. Turn on the water at a reduced rate and slowly fill the unit. When the unit is filled, increase the water supply until the jet stream reaches its intended target.
4. Use the flow adjustment valve to make final adjustments to the overall water height of the jets.

NOTE Laminar jets are sensitive to wind, earth movement and equipment vibration. Secure the laminar jet and deck canister to minimize vibration. Periodic stream distortion caused by pump vibrations and motor electrical fluctuations is normal and not indicative of a nozzle defect. Also, occasionally a nozzle will “burp” due to pumped air collecting in the nozzle body. This is normal and will occur until all air is purged from the piping system. Trapped air can also cause slight distortion in water action. It is imperative that all air is removed to ensure proper water feature operation.

5. To adjust the angle of the jet move the laminar jet up or down to increase or decrease the angle by hand or using a screwdriver in the angle adjustment slot shown in Figure 10.

NOTE The angle can be adjusted approximately 10 degrees.

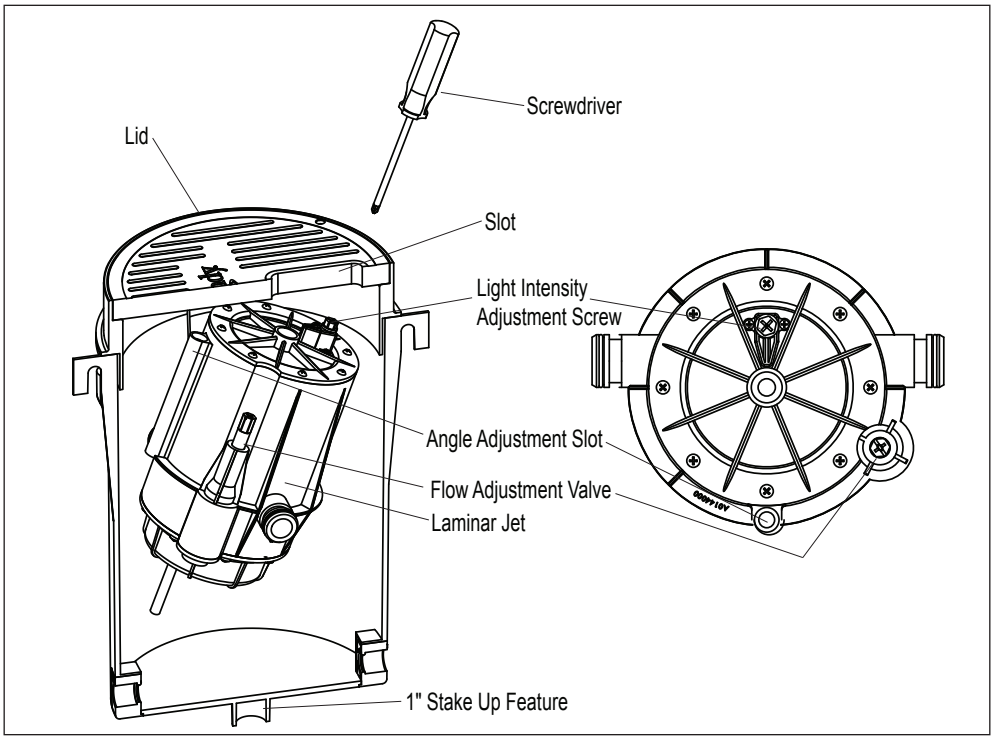

Figure 10. Laminar Jet Light and Flow Adjustment

6. The laminar jet is installed on two (2) pivots. Loosen the locking screws to adjust the jet angle. Refer to Figure 11. Once you are satisfied with the angle and location of the jet, tighten the locking screws.

7. Secure the deck canister lid to the deck canister collar, using two (2) #10 by 1½ inch, Phillips, flat head stainless steel screws.

NOTE It is recommended to drill 1/8" pilot holes in the lid. Then the screws can be threaded into the holes. This will complete the installation and secure the jet from movement.

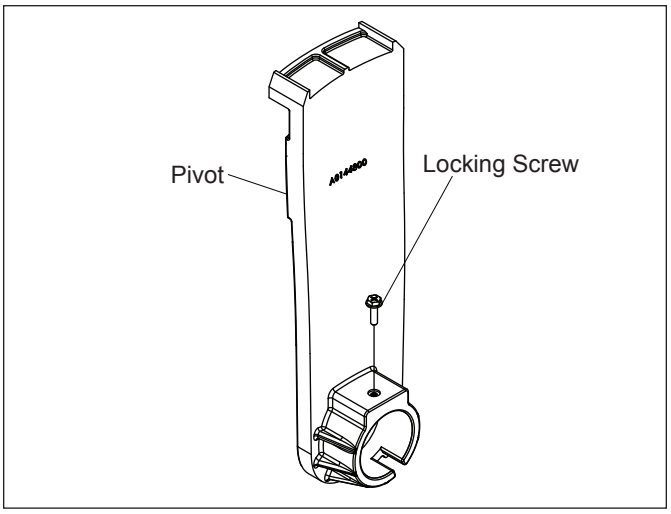

Figure 11. Locking Screw Location

Section 7. Operating the Laminar Jet with LED Light

7.1 To Operate the Light and Change Colors

Turn the light **ON**. The ***first*** time the light is turned on, the color sequence begins with the Alpine White. To change the color, turn the light OFF and then ON within three (3) seconds. Continue turning OFF and ON until the desired light color mode is reached. See Table 2 for the color mode sequence.

Table 2. Jandy Laminar Jet with LED Lights Sequence

Sequence Order	Color Modes
1	Alpine White
2	Sky Blue
3	Cobalt Blue
4	Caribbean Blue
5	Spring Green
6	Emerald Green
7	Emerald Rose
8	Magenta
9	Violet
10	Slow Color Splash
11	Fast Color Splash
12	America the Beautiful
13	Fat Tuesday
14	Disco Tech

NOTE When the light is turned OFF for more than seven (7) seconds, it will remain in the color set that is currently active. When the light is turned back ON, the light will be on the same color set.

7.2 To Reset to the Beginning of the Color Sequence

Turn the light OFF, wait four (4) to six (6) seconds, then turn ON, the light will return to the beginning of the color cycle (Alpine White).

NOTE If an AquaLink® RS control system is being used the color set can be selected using the controller.

NOTE To synchronize colors on multiple Jandy WaterColors light systems and Jandy Laminar Jets with LED Lights wired to separate switches, preform the above actions on all of the switches simultaneously. All Jandy WaterColors lights and Jandy laminar jet with LED lights will synchronize automatically if activated by the same switch. No other accessories are required.

Section 8. Light Intensity Set Up

8.1 Light Intensity Adjustment Set

NOTE The LED light intensity can be adjusted to your preference. Increased water stream flow will cause a greater disturbance of the laminar jet stream and create a more intense light.

1. Use the light intensity adjustment screw attached to the scratcher to adjust the light intensity as shown in Figure 12.
2. To increase the light intensity, turn the screw counter-clockwise to increase the water stream coming out of the scratcher. This water stream disturbs the surface of the laminar jet flow causing an increase in the light intensity.

NOTE Laminar jets are sensitive to wind, earth movement and equipment vibration. Secure the laminar jet and deck canister to minimize vibration. Periodic stream distortion caused by pump vibrations and motor electrical fluctuations is normal and not indicative of a nozzle defect. Also, occasionally a nozzle will “burp” due to pumped air collecting in the nozzle body. This is normal and will occur until all air is purged from the piping system. Trapped air can also cause slight distortion in water action. It is imperative that all air is removed to ensure proper water feature operation.

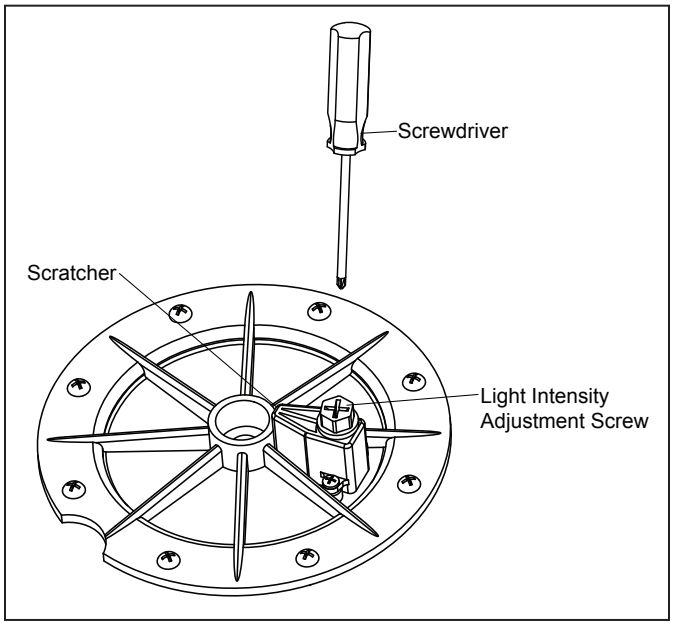

Figure 12. Scratcher Assembly and Light Intensity Adjustment Screw

Section 9. General Maintenance and Troubleshooting

Perform routine maintenance on the filter to ensure trouble-free nozzle operation. Be careful not to allow debris to enter the inlet plumbing when cleaning filters.

NOTE Always flush lines after cleaning and backwash of filters.

9.1 Clogged Finger Screen

1. If the finger screen becomes clogged with debris causing the stream to be distorted, remove the laminar jet assembly by unscrewing the two (2) deck canister lid retaining screws.
2. Remove the deck canister lid and the jet assembly and place on the deck. Disconnect the union located on the flexible hose attached to the bottom of the jet assembly.
3. Remove the finger screen from the union and clean with a garden hose.

NOTE Avoid damage to the nozzle opening. After clean up, reinstall the unions.

9.2 Winterization

The laminar jet can be winterized in regions that require winterization.

1. Remove the deck canister lid assembly and unscrew the ½ inch union.
2. Thread the cap on the flexible hose attached to the deck canister. The laminar jet can then be replaced in the deck canister or may be removed to a storage location. If left in the deck canister, tape over the slot opening to ensure no water will enter the system. If fiber optic cable is used, be sure to remove the retaining nut on the waterproof fitting on the bottom of the jet assembly.

Section 10. Parts List and Exploded View

10.1 Parts List

Key No.	Description	Model	Order Part No.
1	LED Light Engine Assembly, Laminar Jet	All	R0488800
2	Fiber Optic Assembly, Laminar Jet	All	R0488900
3	Deck Canister, Laminar Jet	All	R0489100
4	Jet Assembly, Laminar Jet (No Light Module)	All	R0489200
5	Cover and Screens (5), Laminar Jet Assembly	All	R0489300
6	Mounting Brackets and Hardware, Laminar Jet	All	R0489500
7	Rebuild Kit, All Hardware, Scratcher, Finger Screen & Unions	All	R0490000
8	Lid and Collar, Pebble, Laminar Jet	All	JLPBL
	Lid and Collar, Pewter, Laminar Jet	All	JLPWTR
9	Laminar Jet with LED Light Retrofit Kit	All	R0499900
10	Laminar Jet with Fiber Optic Retrofit Kit	All	R0500300

NOTE If the electrical cord of the LED light assembly is damaged, the entire LED light engine assembly (R0488800) must be replaced.

10.2 Exploded View

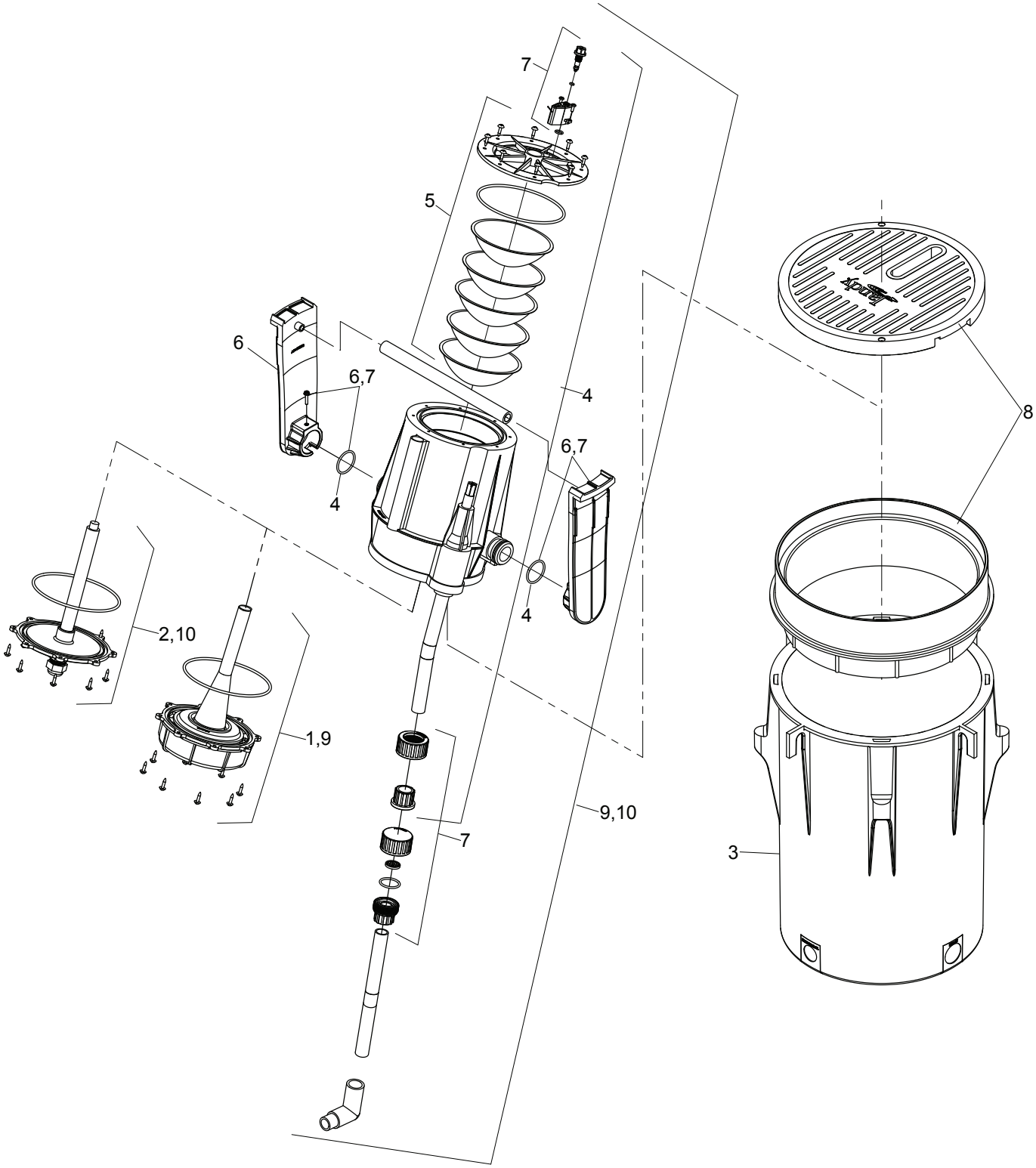

LIMITED WARRANTY

Thank you for purchasing Jandy® pool and spa products. Zodiac Pool Systems, Inc. warrants all parts to be free from manufacturing defects in materials and workmanship for a period of one (1) year from the date of retail purchase, with the following exceptions:

- AquaLink® RS units installed with Jandy® Surge Protection Kits will be covered for two (2) years.
- Never Lube® valves are warranted for the life of the pool and/or spa on which they were originally installed.
- AquaPure® Electronic Chlorine Generator Electrolytic Cells carry a five (5) year limited warranty on a prorated basis.
- Heat pumps are covered for two (2) years. There is a lifetime warranty on titanium tubing.
- The heat pump compressor is covered for five (5) years.
- The DuoClear® Electrolytic Cells carry a three (3) year limited warranty on a prorated basis.
- The DuoClear® Vessels carry a three (3) year limited warranty.

This warranty is limited to the first retail purchaser, is not transferable, and does not apply to products that have been moved from their original installation sites. The liability of Zodiac Pool Systems, Inc. shall not exceed the repair or replacement of defective parts and does not include any costs for labor to remove and reinstall the defective part, transportation to or from the factory, or any other materials required to make the repair. Refrigerant or other expendables are not covered by the warranty. This warranty does not cover failures or malfunctions resulting from the following:

1. Failure to properly install, operate, or maintain the product(s) in accordance with our published Installation, Operation, and Maintenance Manuals, which are provided with the product(s).
2. The workmanship of any installer of the product(s).
3. Not maintaining a proper chemical balance in your pool and/or spa [pH levels between 7.2 and 7.8, with ideal ranges being between 7.4 and 7.6, Total Alkalinity (TA) between 80 to 120 ppm, Total Dissolved Solids (TDS) less than 2000, not including salt ppm].
4. Abuse, alteration, accident, fire, flood, lightning, rodents, insects, negligence, or acts of God.
5. Scaling, freezing, or other conditions causing inadequate water circulation.
6. Operating the product(s) at water flow rates outside the published minimum and maximum specifications.
7. Use of non-factory authorized parts or accessories in conjunction with the product(s).
8. Chemical contamination of combustion air or improper use of sanitizing chemicals, such as introducing sanitizing chemicals upstream of the heater and cleaner hose or through the skimmer.
9. Overheating; incorrect wire runs; improper electrical supply; collateral damage caused by failure of O-rings, DE grids, or cartridge elements; or damage caused by running the pump with insufficient quantities of water.

LIMITATION OF LIABILITY:
This is the only warranty given by Zodiac Pool Systems, Inc. No one is authorized to make any other warranties on behalf of Zodiac Pool Systems, Inc. **THIS WARRANTY IS IN LIEU OF ALL OTHER WARRANTIES, EXPRESSED OR IMPLIED, INCLUDING, BUT NOT LIMITED TO, ANY IMPLIED WARRANTIES OF FITNESS FOR A PARTICULAR PURPOSE AND MERCHANTABILITY. ZODIAC POOL SYSTEMS, INC. EXPRESSLY DISCLAIMS AND EXCLUDES ANY LIABILITY FOR CONSEQUENTIAL, INCIDENTAL, INDIRECT, OR PUNITIVE DAMAGES FOR BREACH OF ANY EXPRESSED OR IMPLIED WARRANTY.** This warranty gives you specific legal rights. You may also have other rights that vary by state or province.

WARRANTY CLAIMS:
For prompt warranty consideration, contact your dealer and provide the following information: proof of purchase, model number, serial number, and date of installation. The installer will contact the factory to obtain instructions regarding the claim and to determine the location of the nearest designated service center. If the dealer is not available, you can locate a service center in your area by visiting www.jandy.com or by calling our technical support department at 1.800.822.7933 in the United States or 1.888.647.4004 in Canada. All returned parts must have a Returned Material Authorization number to be evaluated under the terms of this warranty.