BRILLIANT WONDERS LED BUBBLERS

INSTALLATION INSTRUCTIONS & PRODUCT MANUAL

CMP 25503 SERIES

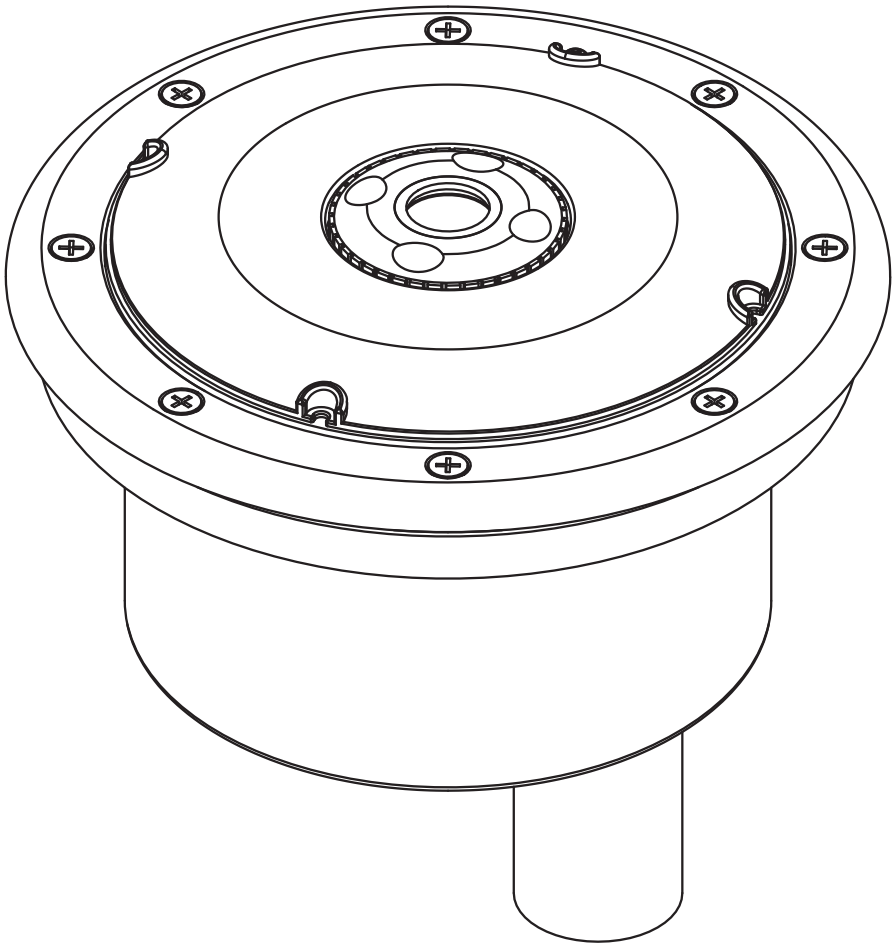

Brilliant Wonders® LED BUBBLERS

www.aybwatersolutions.mx

TABLE OF CONTENTS

A. PRODUCT OVERVIEW . . . 3

A.1 Specifications

A.2 Packing List

B. SYSTEM BLOCK DIAGRAM . . . 3

C. INSTALLATION GUIDE . . . 4

C.1 Mechanical Installation

C.2 Electrical Installation

D. OPERATION MANUAL . . . 8

D.1 Initial Setup

D.2 Light Sequence Operation

D.3 Light Show Programs

E. WINTERIZATION . . . 9

F. ORDERING GUIDE . . . 10

A. PRODUCT OVERVIEW

A.1 SPECIFICATIONS

Power input: 12.0 – 12.5 VAC
Max Current: 1.6 Amps
Maximum Load Power: 20 Watts

Color Source: RGB
LED Life Expectancy: Over 50,000 Hours

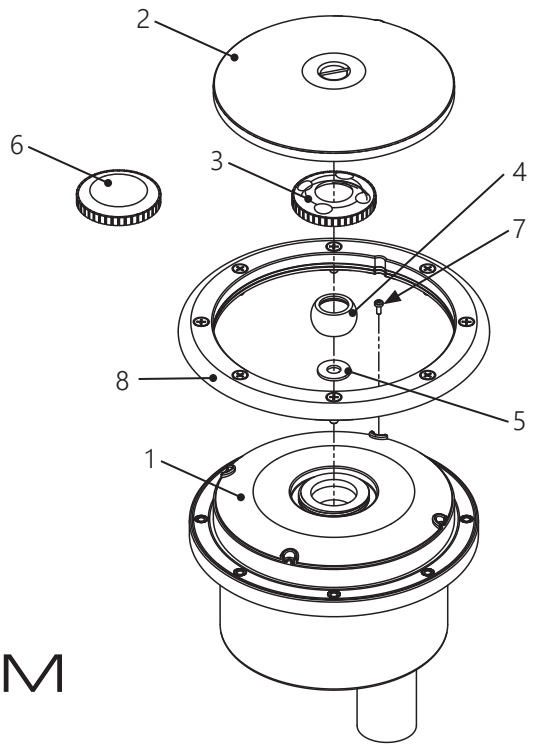

A.2 PACKING LIST

1. Bubbler Unit
   Lighting Units available in 25, 50, 75, 100, and 150 ft options
2. Housing Debris Cover - Winter Cap
3. Eyeball Cap
4. Eyeball Water Diverter
5. Eyeball Reducer Flange
6. Light Use Only Cap
7. LED Module Retaining Screw - M4
8. Vinyl Pool Ring Assembly (OPTIONAL - SOLD SEPARATELY)
   One (1) Vinyl Pool Ring
   One (2) Vinyl Pool Gasket
   Eight (8) Vinyl Pool Flange Screws

B. SYSTEM BLOCK DIAGRAM

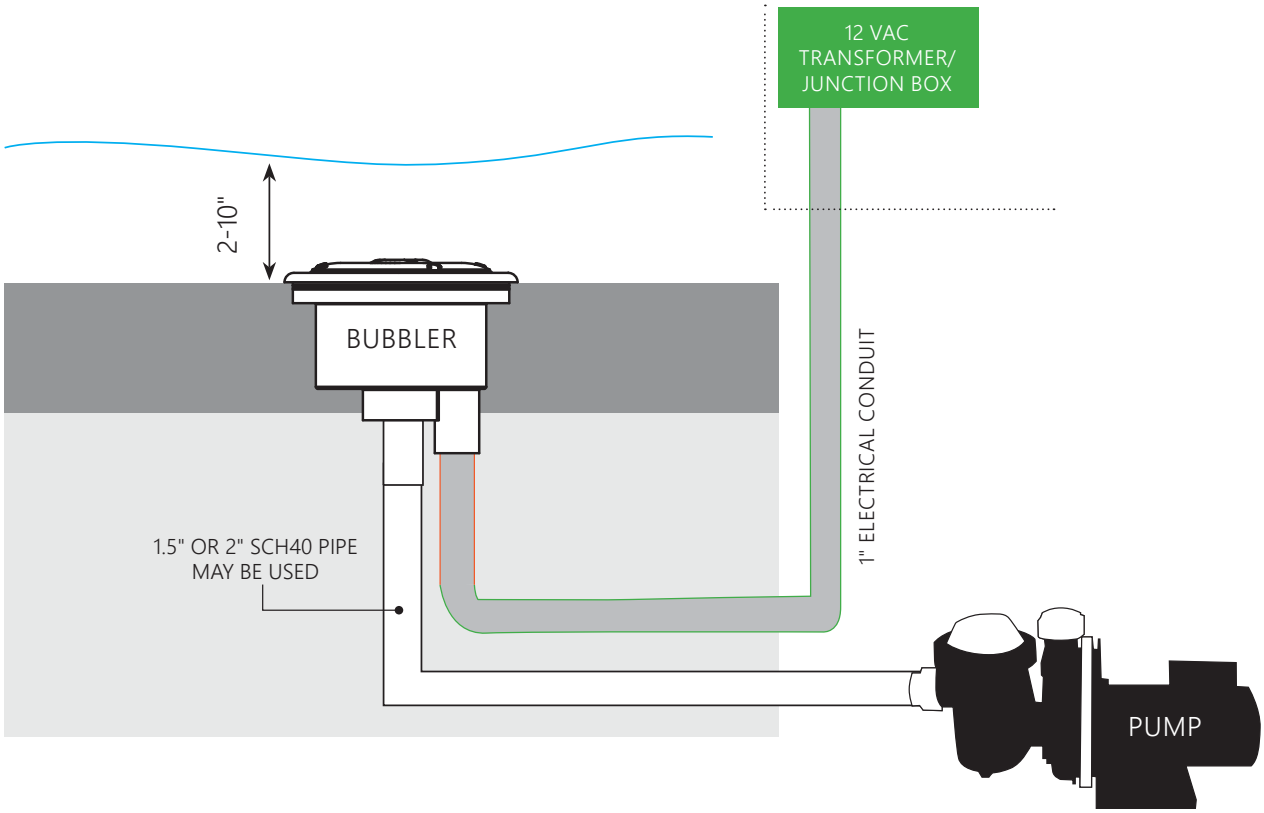

FIGURE 1: SYSTEM BLOCK DIAGRAM

WARNING

RISK OF ELECTRICAL SHOCK OR ELECTROCUTION

This light must be installed by a licensed or certified electrician or a qualified pool serviceman in accordance with the National Electric code and all applicable local codes and ordinances. Improper installation will create an electrical hazard which could result in death or serious injury to pool users, installers, or others due to electrical shock. Always disconnect power to light at the circuit breaker before servicing the light.

READ AND FOLLOW ALL INSTRUCTIONS IN THIS MANUAL

NOTICE

External flexible cord cannot be replaced. Do not damage cord.

⚠ WARNING

Do not replace wires by splicing wires under water, or behind the niche.

⚠ WARNING

12 VAC system. Only use and approved AC transformer (sold separately). When using a junction box, connect 12V AC connections to the junction box terminals. NEVER connect the light directly to high voltage lines.

C.1 MECHANICAL INSTALLATION

This Brilliant Wonders Lighted Bubbler Unit must be installed as specified by these instructions. Please follow ALL of the instructions enclosed with this unit. It is recommended to keep the unit in its original packaging until the site is prepared for installation. Refer to Figure 1 Block Diagram above for reference.

NOTICE **USE ONLY WATER THAT HAS BEEN PROPERLY FILTERED.**

Each unit is carefully packed at the factory and comes with a construction debris cover that prevents most construction contamination prior to operation. Remove the light module from the body by first removing the LED Module Restraining Screw, and then turn the light module **CLOCKWISE** to remove (Figure 2). Install the debris cover. Put the light module in a safe place until ready for final installation.

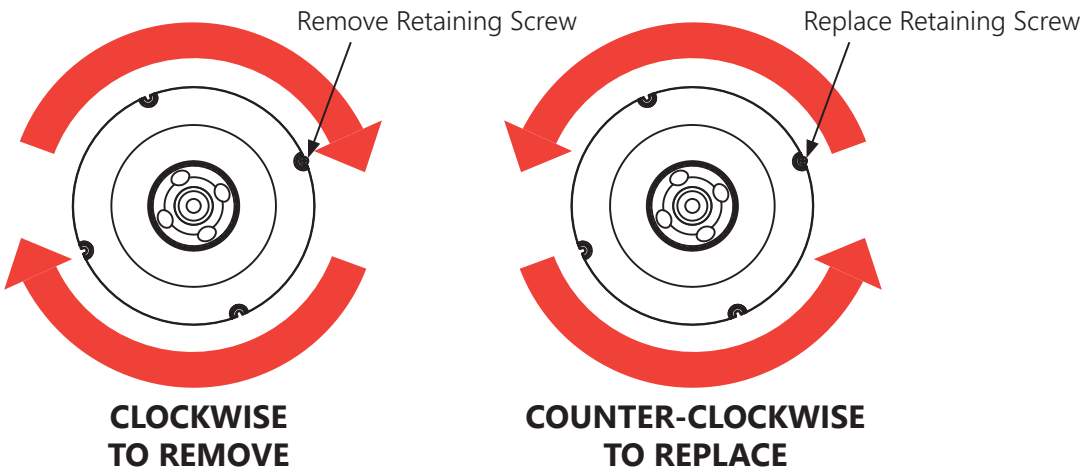

FIGURE 2: LED MODULE INSTALLATION

NOTICE **FLUSH THE PIPE PRIOR TO INSTALLATION**

C.1.1 Determine the location(s) for the Brilliant Wonders Lighted Bubbler(s). The unit can be installed in various positions from the typical horizontal mount or used as in a vertical wall mount. Begin by prepping the area for installation as you would a main drain sump. There is a 1 ½" – 2" PVC combination socket located on the bottom of the body of the bubbler to run water service. There is also a 1" PVC slip socket on the bottom to run conduit for electrical connections. CMP recommends mounting the bubbler no more than 14" below the surface of the water horizontally when installed as a bubbler/fountain for the best combination effect of water and light.

C.1.2 When using the unit as a light only, glue a plug into the water port on the back of the body, and thread the Light Use Only Cap onto the front. (P/N 25552-309-300) If the bubbler is mounted on a vertical wall, the unit will act more like a lighted jet and will not give the same effect as a horizontal application.

C.1.3 Install the light module and run cord through the conduit to the junction box. Install the "hold down" screw.

C.1.4 Complete the rough-in by plumbing the water line to the desired pumping system. Flush the water line prior to any startup to remove any foreign material from construction that may be inside the system. Be sure to install an in-line flow control valve to adjust the height and flow of the water.

C.1.5 After the system has been started, adjust the height of the water using this valve to get the desired effect. The following tables (FIGURE 2) provides approximate values for water column height with combinations of GPM and depth of the Brilliant Wonders Lighted Bubbler mounted in the horizontal position.

C.1.6 Install the electrical conduit from the bubbler to the system control box. (See C.2 Electrical Installation)

⚠ WARNING **12 VAC ONLY**

⚠ CAUTION **INSTALL CONTROL BOX AT LEAST TWO (2) FEET ABOVE THE WATER LEVEL**

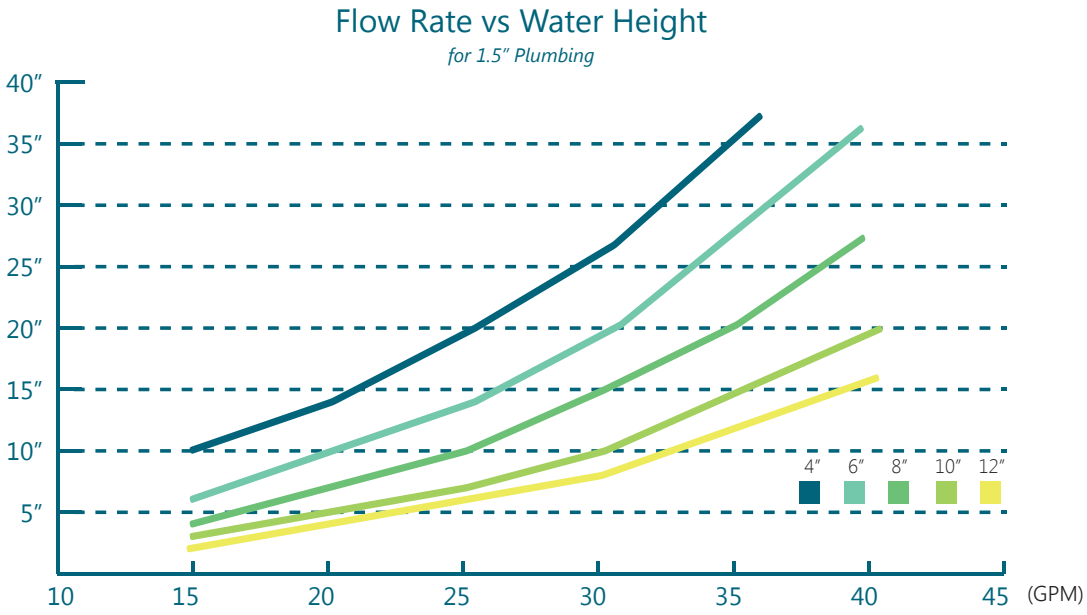

FIGURE 3: PERFORMANCE DATA

Plume Height At Given Water Depths

	1/2" REDUCER					3/4" REDUCER				
	4"	6"	8"	10"	12"	4"	6"	8"	10"	12"
10gpm	13	7								
15gpm	30	20	13	10	8	9	6	4.5	3.5	2
20gpm	55	34	24	18	13	13.5	10	8	6.5	4.5
25gpm	-	-	38	28	20	20	15	12	9.5	7
30gpm	-	-	-	-	-	28	21	16	12.5	10
35gpm	-	-	-	-	-	38	29	20.5	16	13
40gpm	-	-	-	-	-	-	37	26	20	16

21.1mm Nozzle with 2" Piping | Water height may vary

FIGURE 4: SUPPLEMENTAL PERFORMANCE DATA

C.2 ELECTRICAL INSTALLATION

C.2.1 With all of the different components and applications in the pool and spa industry, proper installation recommendations cannot be taken for granted. This procedure gives specific recommendations to ensure that electrical wiring of your Brilliant Wonders Lighted Bubbler Unit is properly installed. The installer should also consult local inspectors to insure that the unit is installed according to all local building codes and regulations. Refer to the schematic below for installation of the electrical system (Figure 7).

C.2.2 The 12VAC transformer (not included) is to be located in a waterproof enclosure. The conduit from the Brilliant Wonders Bubbler should be connected to the transformer enclosure. Pull the cable from the Brilliant Wonders Bubbler through the conduit to the transformer enclosure (not included). Leave about 12-24" of wire in the Brilliant Wonders Lighted Bubbler's inner housing (this is to allow for servicing of the LED module - Figure 6). Pull the rest of the cable through to the transformer box. The bubbler unit can be mounted onto the hub by winding the excess cable around the inner hub inside the housing and lining up the LED module with the guide pins on the hub. Secure the light by pushing the light downward onto the hub and twisting the light unit **COUNTER-CLOCKWISE** (Figure 5). Secure the unit by replacing the LED Module Retaining Screw.

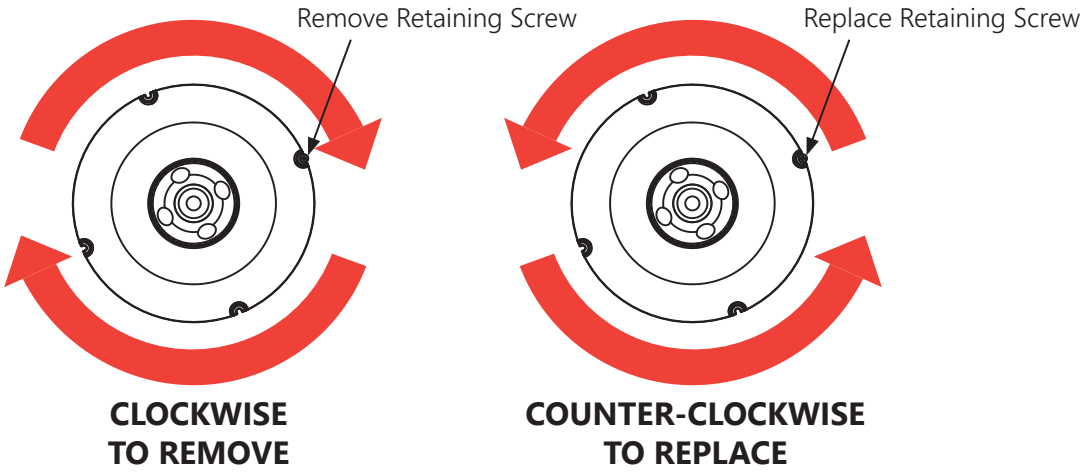

FIGURE 5: LED MODULE INSTALLATION

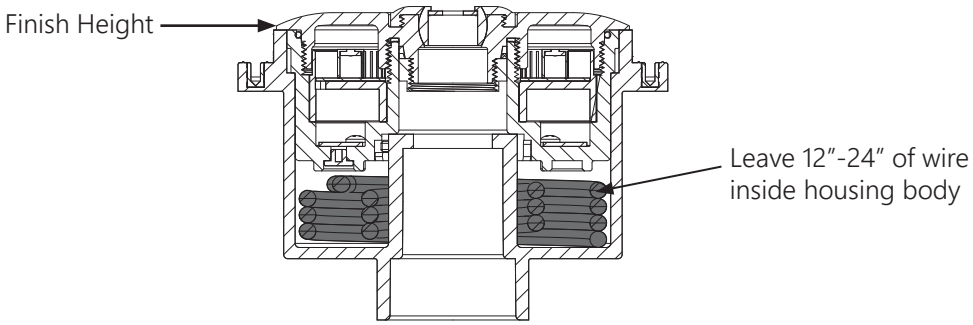

FIGURE 6: EXTRA WIRE IN HOUSING

C.2.3 Connect the 120VAC switched input to the input side of the transformer as shown in the sample below. Locate the power transformer output terminals and attach the two feed wires (one Black and one White) from the bubbler. These black and white wires may be connected in any order to the output terminals on the transformer as they are not polarity dependent. Attach any grounded wire to the appropriate terminals and ensure all connections have been installed properly. Ensure the switch is in the OFF position prior to startup. Your LED Unit is now ready for operation.

NOTICE **NEVER CONNECT UNIT TO A DIMMER SWITCH. THIS CAN PERMANENTLY DAMAGE BUBBLER UNIT**

NOTICE **FOR WARRANTY CLAIMS, BUBBLER MUST HAVE COMPLETE CORD INTACT. CUT ELECTRICAL CONNECTION CORDS WILL VOID WARRANTY**

⚠WARNING **12VAC INPUT ONLY. FAILURE TO USE 12 VAC SYSTEM WILL PERMANENTLY DAMAGE THE LED UNIT**

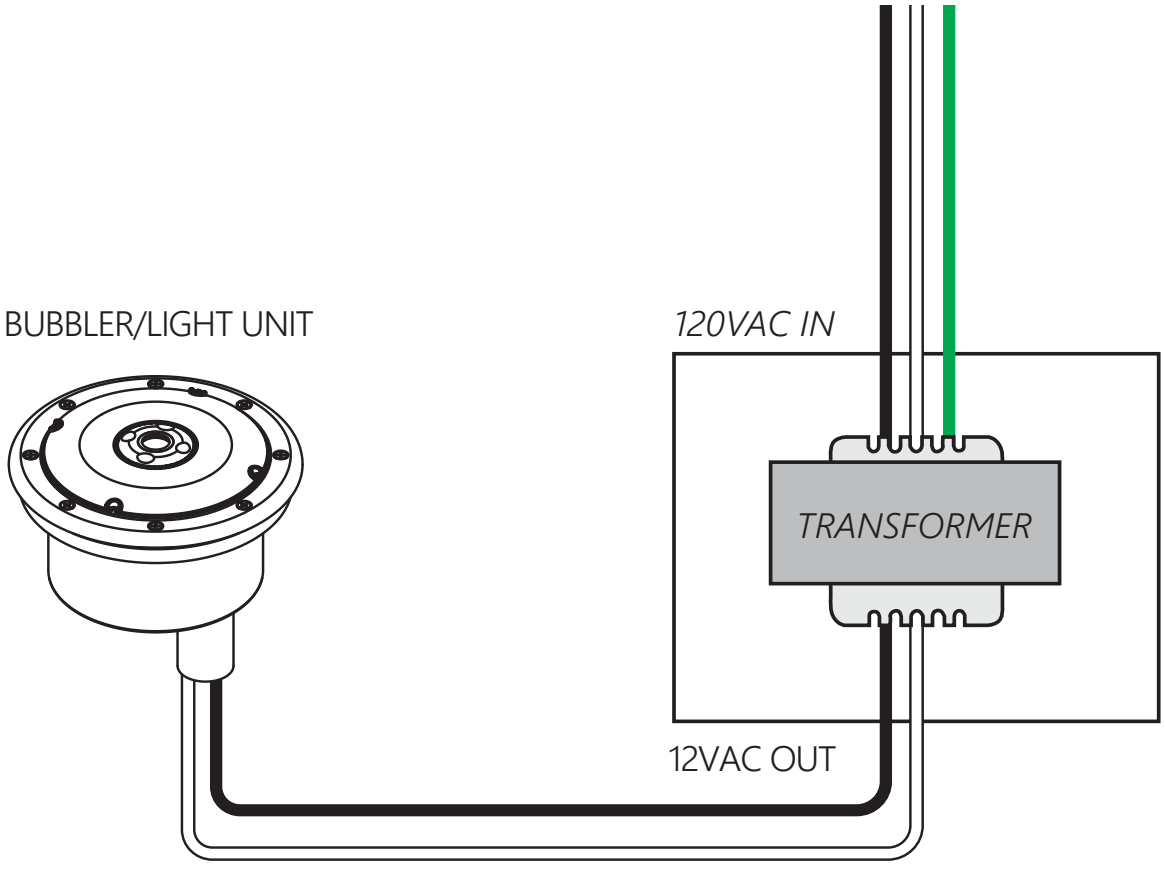

FIGURE 7: ELECTRIC SCHEMATIC EXAMPLE

D.1 INITIAL STARTUP

NOTICE **USE ONLY WATER THAT HAS BEEN PROPERLY FILTERED.**

D.1.1 The following check list should be made prior to startup. This includes initial construction startup and seasonal start up.

1. Remove the construction/debris cover from the Bubbler.
2. Visually inspect the unit to ensure that there is no debris in the nozzle.
3. Inspect the housing and LED module for any signs of damage such as cracks, holes, etc.
4. Check to ensure that the LED module has been locked into place. If not, refer to section 4.2.2 for installation.
5. Ensure all electrical connections have been verified and inspected.
6. Do not turn on the unit until the pool has been filled to the full water mark.

D.1.2 After performing the startup check list, turn on the pumping system and allow the air to purge from the lines. Using the in line flow control valve, adjust the flow to the Brilliant Wonders Lighted Bubbler to obtain the desired height of the water flume. Refer to the data in section 4.1.2 for general performance data.

D.1.3 Visually check the unit to ensure that there are no leaks in the housing or the lighting unit. If any leaks are found, turn off water and address the leakage. If leakage is internal to the unit, please call customer service for further support. Repeat start-up sequence and recheck unit.

D.1.4 After the unit is running properly, energize the power to the transformer at the control box. Using the wall switch, now turn on the Brilliant Wonders Lighted Bubbler. All Nine (9) Lights should be functional.

⚠CAUTION **DO NOT LOOK DIRECTLY INTO THE LED LIGHT SOURCE. PERMANENT EYE DAMAGE MAY OCCUR.**

⚠CAUTION **DO NOT OPERATE THE LED LIGHTS FOR MORE THAN 20 SECONDS IF UNIT IS NOT SUBMERGED IN WATER. FAILURE TO DO SO MAY CAUSE OVERHEATING AND DAMAGE TO THE ELECTRONICS.**

D.2 LIGHT SEQUENCE OPERATION

D.2.1 The Brilliant Wonders Lighted Bubbler can be controlled using a standard wall-mount light switch. Multiple Brilliant Wonders Lighted Bubbler lights can be connected via a junction box to a single switch so that all lights can be switched on and off together. This will ensure that they will behave with the same lighting sequences. By turning the switch on and off a specific number of times, the light will activate one of the light show modes or will lock in a chosen color.

D.2.2 The first time the switch is powered on to the Brilliant Wonders Lighted Bubbler, a white light will appear. This is the first color of the sequence in the selected programs (Figure 8). To select another fixed color or color show mode (1-14), turn the wall switch off and then back on a specific number of times to go from a current program to the next program. The sequence will rotate from program to program. Please review the chart below and follow the sequence to activate the various show feature effects while in “show” modes. If the unit is turned off for more than 11 seconds, the unit will memorize the last program setting.

E. LIGHT SYNC INSTRUCTIONS

NOTICE When syncing multiple LED light products, color shows will match but cycle timings may vary.

CMP/J-STYLE COLOR SELECTION AND SYNC INSTRUCTIONS

The CMP/J-STYLE Brilliant Wonders 1.5" LED Light is preprogrammed with the following color sequence:

SEQUENCE ORDER	COLOR MODE
1	Alpine White
2	Sky Blue
3	Cobalt Blue
4	Caribbean Blue
5	Spring Green
6	Emerald Green
7	Emerald Rose
8	Magenta
9	Violet
10	Slow Color Splash
11	Fast Color Splash
12	America the Beautiful
13	Fat Tuesday
14	Disco Tech

To operate the light and change colors:

- Turn the light ON. The first time the light is turned on, the color sequence will begin with Alpine White. To change color, turn light OFF then back ON within three (3) seconds. Continue turning OFF and ON until the desired light color mode is reached.
- When the light is turned off for more than seven (7) seconds, it will remain in the color mode that was currently active when the light was turned off.
- To RESET the light to the beginning color sequence (Alpine White), turn the light OFF, wait four (4) to six (6) seconds, then turn the light ON.

E. LIGHT SYNC INSTRUCTIONS

P-STYLE COLOR SELECTION AND SYNC INSTRUCTIONS

The P-STYLE Brilliant Wonders 1.5" LED Lights can be controlled using a standard wall-mount light switch. Multiple lights can be connected via a junction box to a single switch so that all lights can be switched ON and OFF together. P-STYLE Lights are controlled by cycling the AC power from a standard wall switch. By turning the switch ON and OFF a specific number of times, the light activates one of the seven (7) light show modes, fixed colors, and enables the "Hold" and "Recall" feature.

The P-STYLE Brilliant Wonders 1.5" LED Light is preprogrammed with seven light show modes (1-7) and five fixed color modes (8-12). For saving color effects during the "show" modes the light also includes and "Hold" and "Recall" feature (13-14).

SEQUENCE ORDER	COLOR MODE
1	SAm® Mode
2	Party Mode
3	Romance Mode
4	Caribbean Mode
5	American Mode
6	California Sunset Mode
7	Royal Mode
8	Blue
9	Green
10	Red
11	White
12	Magenta
13	Hold
14	Recall

Example to operate the light and change to "California Sunset" show mode:

- Turn the light switch ON and OFF six (6) times.
- During the ON/OFF switching process, no illumination will occur, then a white light will momentarily illuminate.
- The white light will immediately be followed by the selected "California Sunset" mode.

Hold and Recall Features Example:

- Use the "Hold" feature to capture a unique color effect while "Romance Mode" is active.
- Turn switch on and off thirteen (13) times.
- Saved color effect is displayed.
- From any light show or fixed color mode...
- Turn switch ON and OFF fourteen (14) times to activate last saved color effect.
- Saved color effect is displayed.

E. LIGHT SYNC INSTRUCTIONS

H-STYLE COLOR SELECTION AND SYNC INSTRUCTIONS

The H-STYLE Brilliant Wonders 1.5" LED Light is preprogrammed with twelve light modes:

SEQUENCE ORDER	COLOR MODE
1	Voodoo Lounge
2	Deep Blue Sea
3	Afternoon Skies
4	Emerald
5	Sangria
6	Cloud White
7	Twilight
8	Tranquility
9	Gemstone
10	USA!
11	Mardi Gras
12	Cool Cabaret

To operate the light and change colors:

- The H-STYLE Brilliant Wonders 1.5" LED Light is operated through power-cycling; a method of changing modes which requires no special controller or interface. To activate the light simply turn the power switch ON. To advance to the next programmed light mode, turn the switch OFF then back ON within ten (10) seconds. Whenever the light has been off for more than sixty (60) seconds, and it is first turned on, it will come on white for 15 seconds, then go back to the last programmed light mode it was running before being powered off.

To sync the light with additional H-STYLE lights:

- The H-STYLE Brilliant Wonders 1.5" LED Light can easily be synced with additional H-STYLE lights. All lights should be wired to the same switch, this should automatically sync the lights. If the lights get out of sync on the same switch: turn the switch OFF, then wait between eleven (11) and fourteen (14) seconds and turn the switch back ON. When the lights come back on, they should enter program mode number one (1) and be synchronized.

F. WINTERIZATION

E.1 WINTERIZATION STEPS

When the pool is to be prepared for winter or will be out of service for a long period of time, the owner may decide to winterize the pool. The following steps should be followed to ensure that the bubbler unit will not be damaged:

1. Turn off power to the Brilliant Wonders Lighted Bubbler transformer and disconnect power at the breaker box.
2. Turn off power to the recirculating pump.
3. Mark both breakers as being "out of service".
4. If the unit will remain under the water level, no other action is required.

E.2 SYSTEM FLUSH

In the case of pools that have the water drained below the Bubbler housing, it is recommended to flush the water out of the system.

1. Remove the LED Module Retaining Screw and twist the LED module **CLOCKWISE** and remove the Led module from the housing.
2. Disconnect the operating pump and use compressed air or some other source to remove all the water from the lines.
3. Reconnect when the water has been removed from the LED Module housing, supply, and return lines. Reinstall the LED module by turning **COUNTER-CLOCKWISE** (Figure 9).

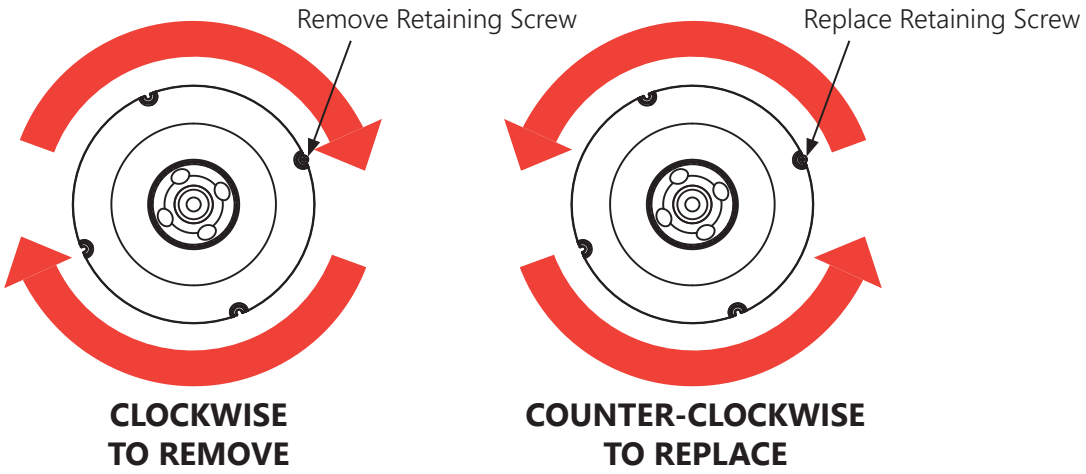

FIGURE 9: LED MODULE INSTALLATION

F. ORDERING GUIDE

CMP P/N	DESCRIPTION
25503-150-000	GUNITE BUBBLER UNIT WITH 150 FT CORD
25503-100-000	GUNITE BUBBLER UNIT WITH 100 FT CORD
25503-025-000	GUNITE UNIT BUBBLER WITH 75 FT CORD
25503-050-000	GUNITE UNIT BUBBLER WITH 50 FT CORD
25503-300-000	WHITE VINYL/FIBERGLASS KIT* (BUBBLER SOLD SEPARATELY)
25503-301-000	GRAY VINYL/FIBERGLASS KIT* (BUBBLER SOLD SEPARATELY)
25503-304-000	BLACK VINYL/FIBERGLASS KIT* (BUBBLER SOLD SEPARATELY)
25503-309-000	TAN VINYL/FIBERGLASS KIT* (BUBBLER SOLD SEPARATELY)
25503-369-000	DARK BLUE VINYL/FIBERGLASS KIT* (BUBBLER SOLD SEPARATELY)

*VINYL POOL INSTALLATION: Choose a Gunite Bubbler from above and Vinyl/Fiberglass Kit. Vinyl /Fiberglass Kit includes 1 Ring, 2 Gaskets, and 8 Screws.

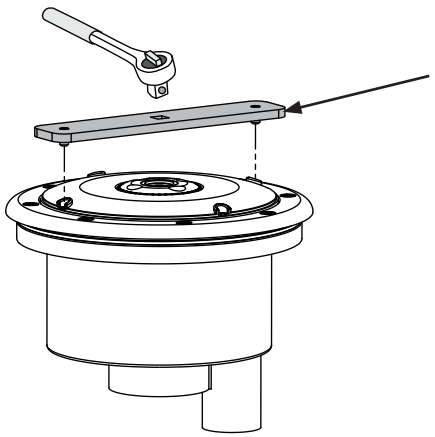

To aid in installation and removal of LED Module purchase the CMP Bubbler Screw Plate (Part Number: 25503-110-999)

(SOLD SEPARATELY)

Brilliant Wonders®
LED BUBBLERS

FOR PRODUCT IMAGES, VIDEOS, LITERATURE AND UP-TO-DATE INSTRUCTIONS VISIT WWW.C-M-P.COM ON YOUR COMPUTER OR MOBILE DEVICE

Check out these great LED Bubbler Fountain Accessories from CMP!

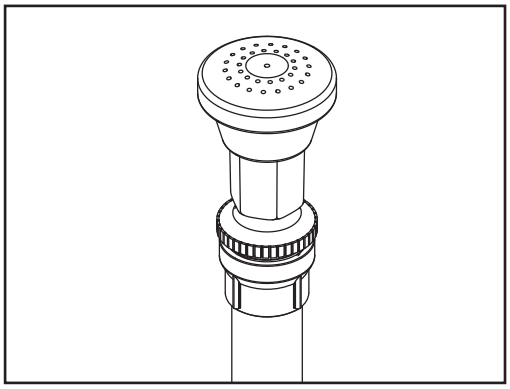

Three Tier Fountain Attachment

25503-930-000
25503-931-000
25503-932-000
25503-933-000
25503-934-000

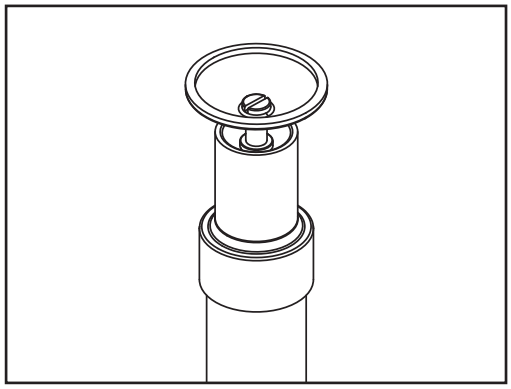

Water Ball Attachment

25503-910-000
25503-911-000
25503-912-000
25503-913-000
25503-914-000

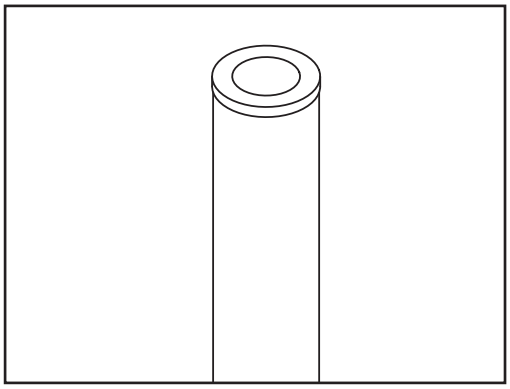

Water Column Attachment

25503-920-000
25503-921-000
25503-922-000
25503-923-000
25503-924-000